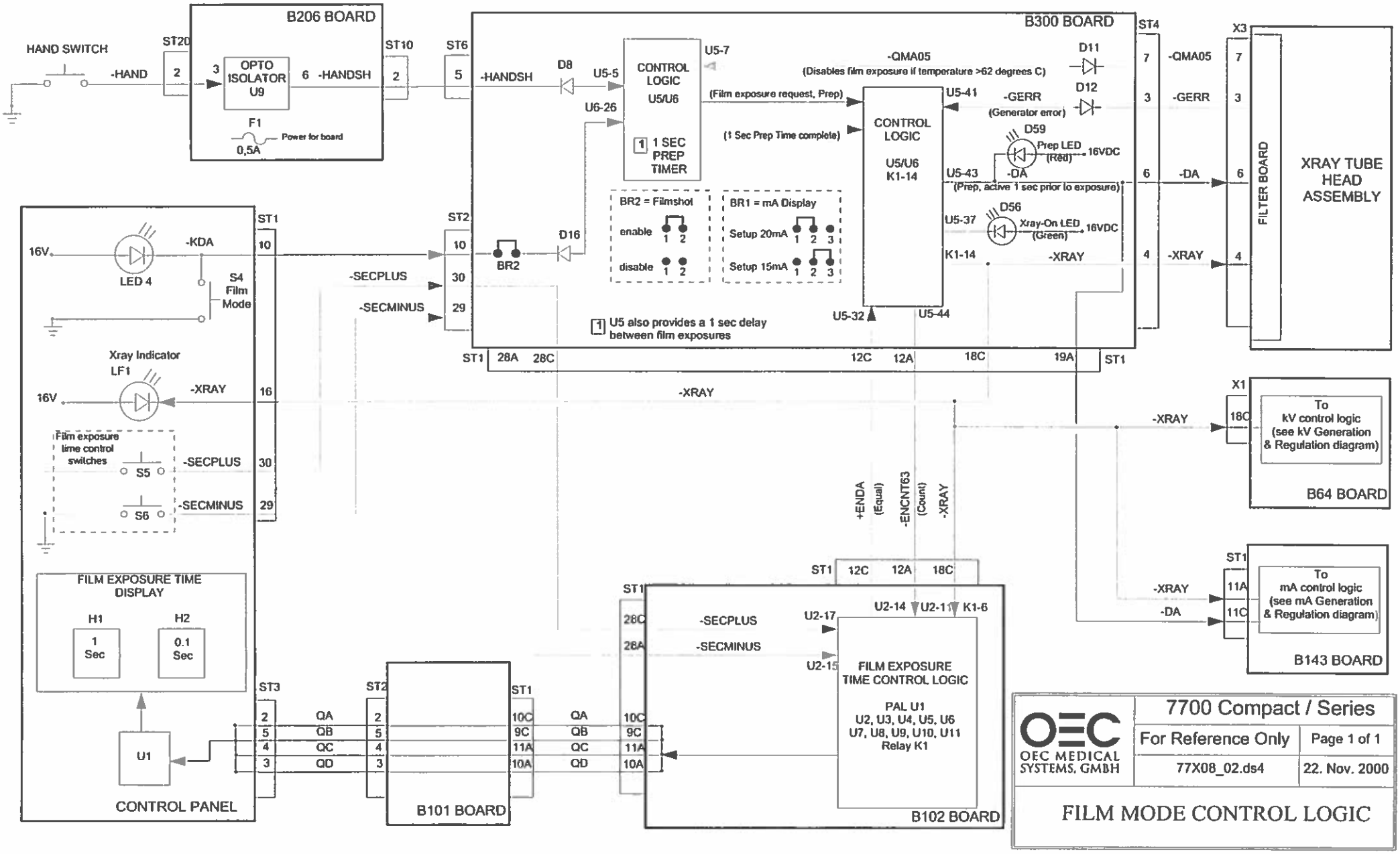
B206 BOARD
HAND SWITCH
-HAND
ST20
OPTO ISOLATOR U9
-HANDSH
ST10
F1
0,5A
Power for board
ST6
B300 BOARD
-HANDSH
D8
U5-5
CONTROL LOGIC U5/U6
U5-7
U6-26
1 SEC PREP TIMER
(Film exposure request, Prep)
(1 Sec Prep Time complete)
-QMA05
(Disables film exposure if temperature >62 degrees C)
CONTROL LOGIC U5/U6 K1-14
U5-41
-GERR
(Generator error)
D11
D12
D59
Prep LED (Red)
16VDC
-DA
U5-43
(Prep, active 1 sec prior to exposure)
D56
Xray-On LED (Green)
U5-37
K1-14
-XRAY
U5-32
U5-44
BR2 = Filmshot
enable
disable
BR1 = mA Display
Setup 20mA
Setup 15mA
BR2
D16
U5 also provides a 1 sec delay between film exposures
ST4
X3
FILTER BOARD
XRAY TUBE HEAD ASSEMBLY
ST1
ST2
16V
LED 4
-KDA
S4 Film Mode
-SECPLUS
-SECMINUS
Xray Indicator LF1
Film exposure time control switches
S5
S6
FILM EXPOSURE TIME DISPLAY
H1
H2
1 Sec
0.1 Sec
U1
CONTROL PANEL
ST3
QA
QB
QC
QD
B101 BOARD
28A
28C
12C
12A
18C
19A
X1
To kV control logic (see kV Generation & Regulation diagram)
B64 BOARD
+ENDA (Equal)
-ENCNT63 (Count)
U2-14
U2-11
K1-6
U2-17
U2-15
FILM EXPOSURE TIME CONTROL LOGIC
PAL U1
U2, U3, U4, U5, U6
U7, U8, U9, U10, U11
Relay K1
B102 BOARD
To mA control logic (see mA Generation & Regulation diagram)
B143 BOARD
OEC MEDICAL SYSTEMS, GMBH
7700 Compact / Series
For Reference Only
Page 1 of 1
77X08_02.ds4
22. Nov. 2000
FILM MODE CONTROL LOGIC